ITEM	SPECIFICATION	QTY	DESCRIPTION	MANUF
1	054A0701	1	FRAME	LOTUS EUROPA
2	340-4630	1	TENDEM	WILWOOD 340-4630
3	LOTUS	1	STEERING RACK SKETCH	SKETCH
4	support master	1	SUPPORT FOR WILWOOD TEMDEM	.

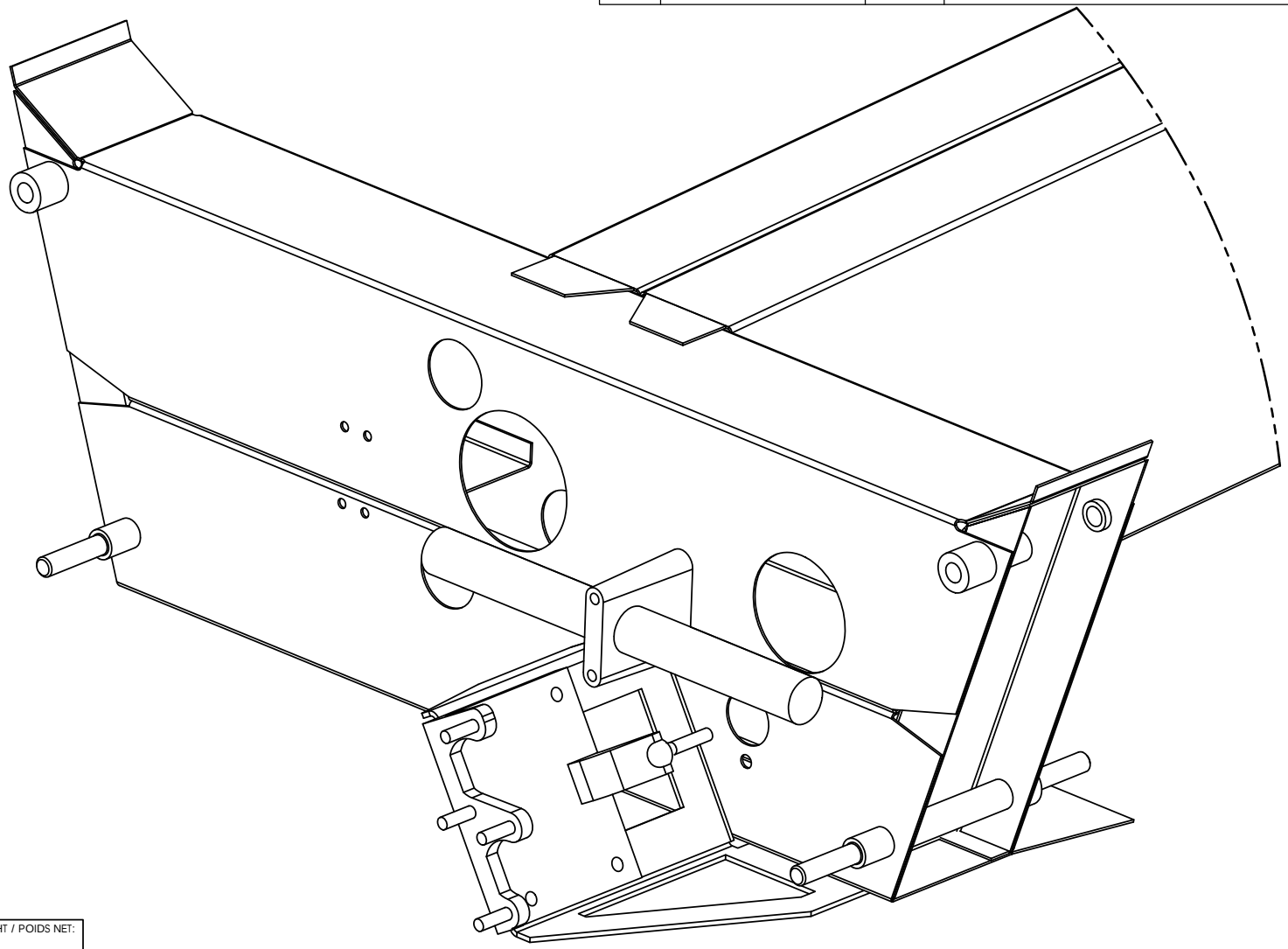

NET WEIGHT / POIDS NET:

REVISION	DESCRIPTION	DATE	BY/PAR

TOLERANCE UNLESS SPECIFIED
TOLERANCES SI NON SPECIFIEES
DIMENSIONS IN INCHES
DIMENSIONS EN POUCES

1/X :	±1/64	MACHINING USINAGE 63
.XX :	±.010	
.XXX :	±.003	
< 60"	±1/16	WELDING, DRILLING SOUDURE, PERÇAGE
≧ 60"	±3/8	
ANGLE:	±1/2°	

TITLE / TITRE

TENDEM BRAKE STUDY

DRAWN BY / DESSIN PAR	DATE	SCALE / ÉCH.	FORMAT	REVISION
		1:10	A	0
APPROVED / APPROUVÉ	DATE	DRAWING NO. / NO. DESSIN		PAGE
		TENDEM WILWOOD STUDY		1/1